Welcome

Pieter Galle
Product Manager

PUMA 3
Puma 3
KEENer & GREENer

It’s a Puma 3 story

- What NEW Puma 3 characteristics?
- Keen & Green approved?

It’s a Puma 3 story

Our mission is:

to help our customers store
a higher percentage (keen) of sellable
crops with less input (green).

KEEN & GREEN

How does a Puma help to reach that goal?

It’s a Puma 3 story

Speed

= Agility

Strength

Bron foto: www.clubs.nl

It’s a Puma 3 story

Speed

= Agility

Strength

It’s a Puma 3 story

But what other resemblances?

It’s a Puma 3 story

Strong bone structure

Strong bone structure

- Constructed around a central chassis beam
- Intelligent weight distribution
- High ground clearance
- **Road legal** tyre machine

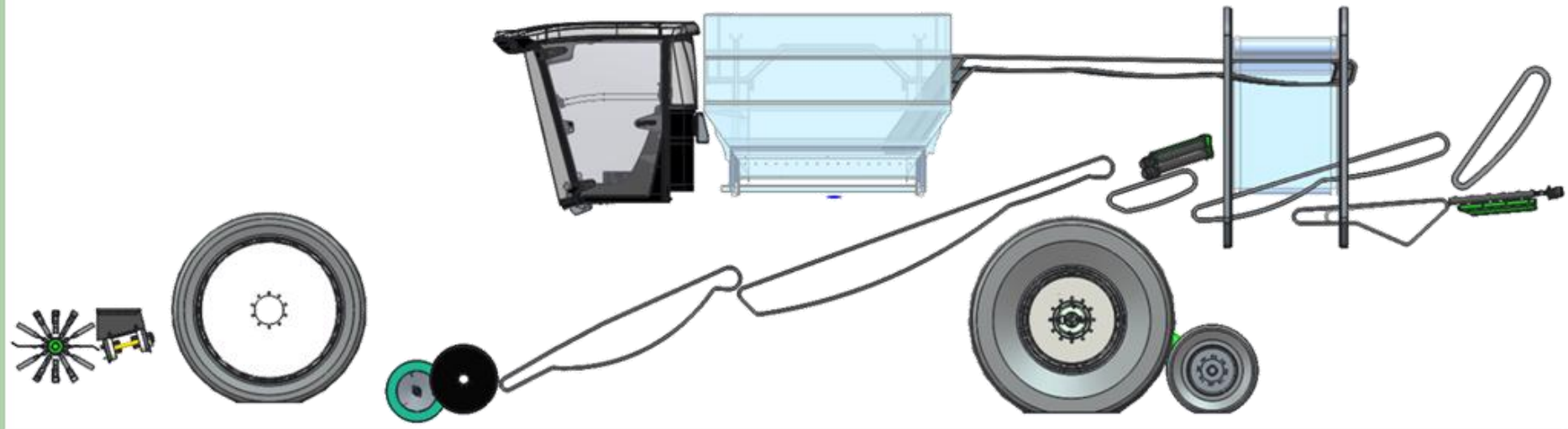

Strong bone structure

- Constructed around a central chassis beam
- Intelligent weight distribution
- High ground clearance
- **Road legal** tyre machine

KEEN & GREEN APPROVED!

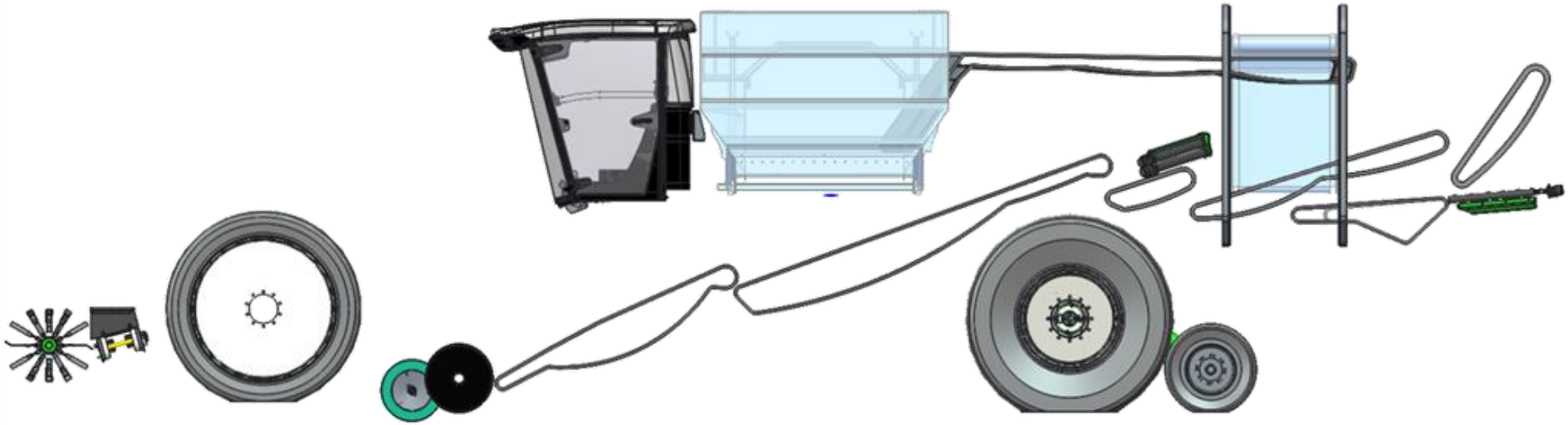

Flow through the machine

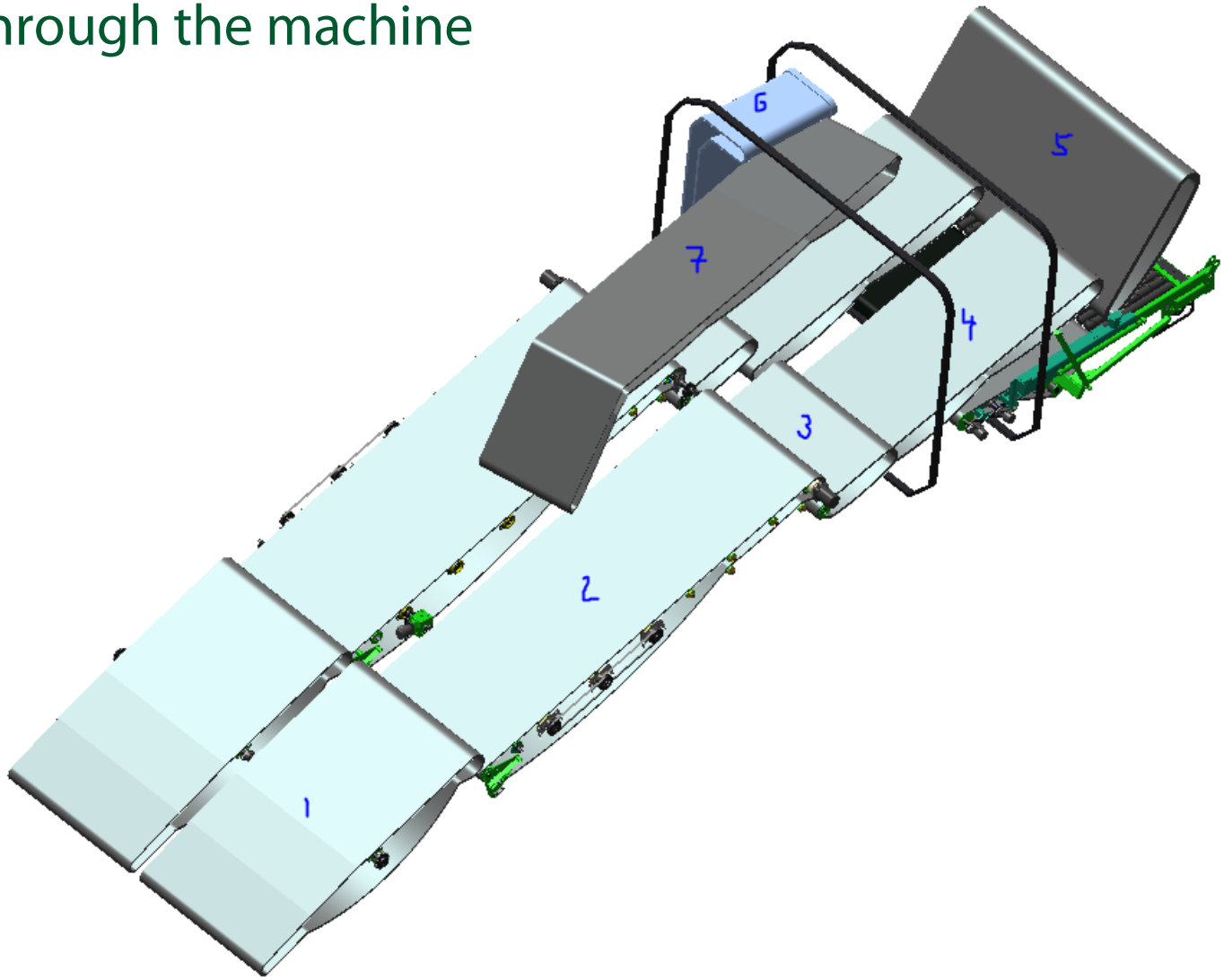

It’s a Puma 3 story

Lightweight

Lightweight

- Only 23,500 kg !
  - Less soil pressure
  - Less fuel consumption
  - Ready for all circumstances

Lightweight

- Only 23,500 kg !
  - Less soil pressure
  - Less fuel consumption
  - Ready for all circumstances

It’s a Puma 3 story

Light-footed & smooth movements

Light-footed & smooth movements

Bigger tyres

- Back: 900/60 R38
- Front: 300/95 R52
- Increased flexibility
  - Optimal tire pressure in case of a full or empty bunker
  - Low soil pressure

More traction

- on front wheels +30%
- on back wheels +15%

Larger stearing radious

- Back 20°
- Front 50°

Light-footed & smooth movements

Bigger tyres (NEW)

- Back: 900/60 R38
- Front: 300/95 R52
- Increased flex
  - Optimal tire
    of a full or ar
  - Low soil pre:

KEEN & GREEN APPROVED!

More traction

- on front wheels +30%
- on back wheels +15%

Larger stearing radious

- Back 20°
- Front 50°

It’s a Puma 3 story

Sharp view

Claas cabin (NEW)

- Spatious
- Good view on digging units
- 12” touch screen
- New joystick
- Quick-pick button for speed adjustments
- A lot of automatics possible

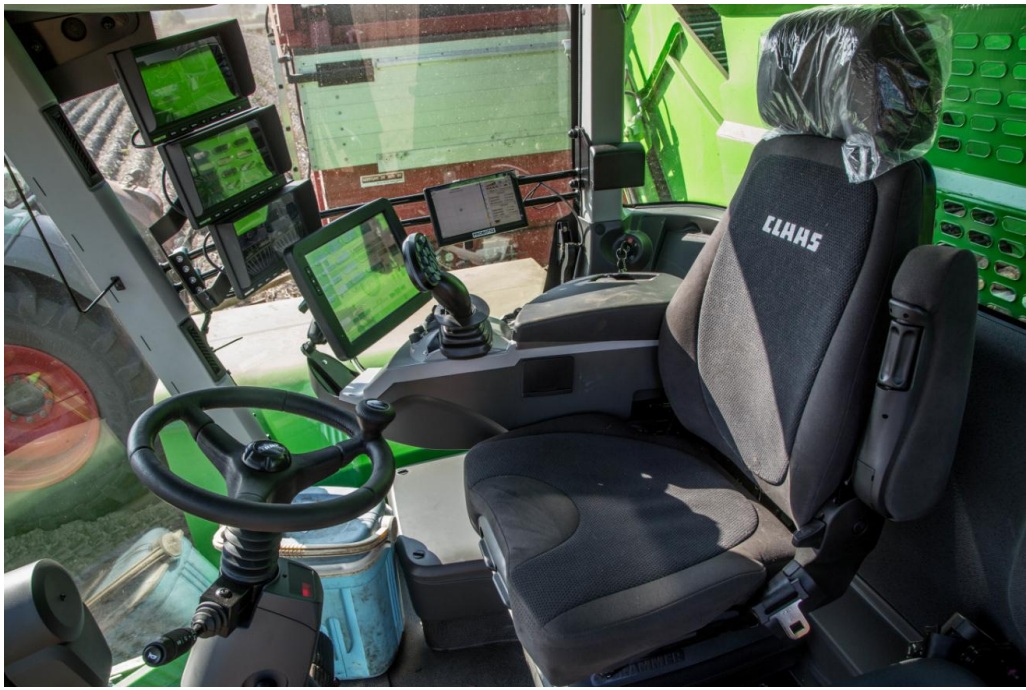

It’s a Puma 3 story

Precise

Command

Command screen – 12” touch-screen

Precise

- Ergonomic & user-friendly steering
- Very precise, time is money
- Less exhausting
- More attention to harvesting process

Precise

- Ergonomic & user-friendly steering
- Very precise, time is money
- Less exhausting
- More attention to harvesting process

It’s a Puma 3 story

Powerful

Powerful

Engine

- VOLVO TAD1373,
  6 cylinders , 12.8L , 469 hp
- Stage IV
- Possible to work on low rpm (1300)
- ECO-modus

→ Low fuel consumption !

- (-20-25% compared to Puma+)

Powerful

Engine

- VOLVO TAD1373,
  6 cylinders , 12.8L , 469 hp
- Stage IV
- Possible to work (
  rpm (1300)
- ECO-modus

KEEN & GREEN APPROVED!

→ **Low fuel consumption !**

- (-20-25% compared to
  Puma+)

It’s a Puma 3 story

Intuitive

Intuitive

- Hydraulically driven haulmtopper with side delivery
- Flail image for topping closely to ridge
- Depth control automatic
- **Land levelling** function to follow ridges even better (NEW !)

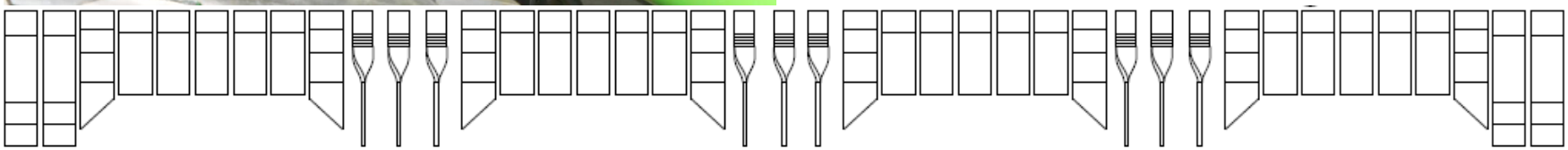

Intuitive

- Hydraulically driven haulmtopper with side
  /
  age for topping
  to ridge
  control automatic
  evelling function
  to follow ridges even better (NEW !)

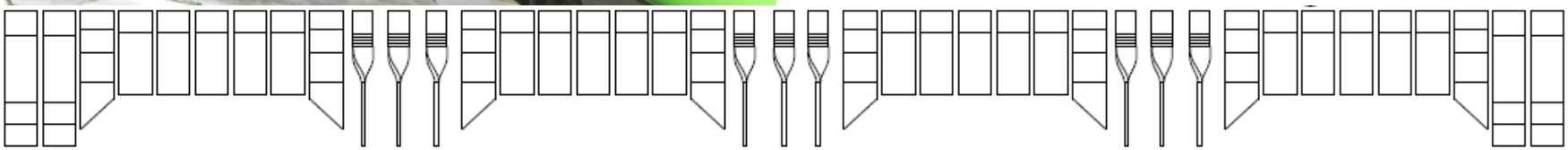

It’s a Puma 3 story

Smart

- 2 or 4-row harvesting is possible

  => 2 times 2-row digging units

- Diggerweb 600 mm longer
- More vibrating capacity:
  - Optional ‘triangular vibrator’ in diggerweb
  - New type of excenter-vibrators in 2nd webs
- Automatic vibrating

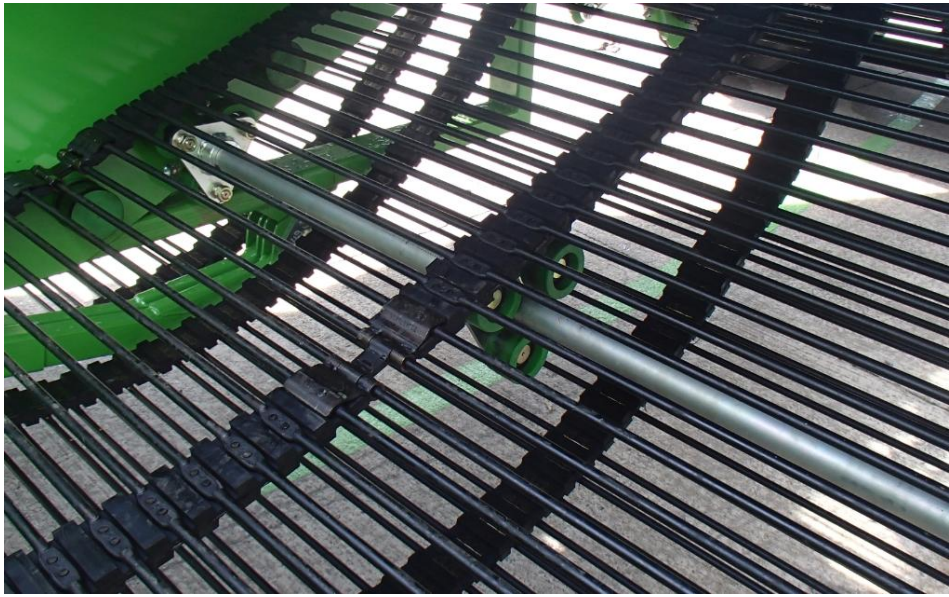

- Diggerweb 600 mm longer
- More vibrati capacity:
  - Optional 'tı vibrator' in
  - New type of excenter-vibrators in 2nd webs
- Automatic vibrating

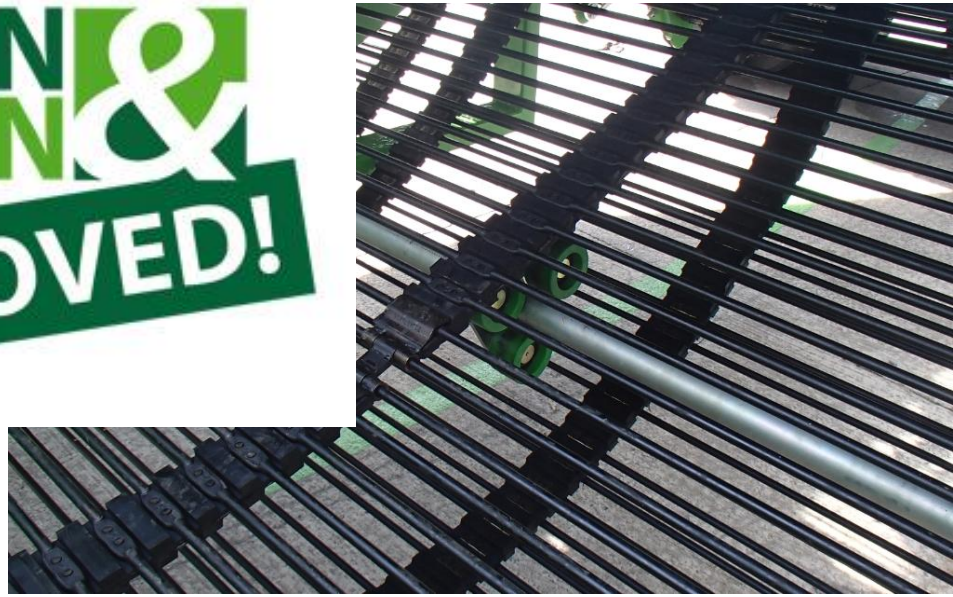

It’s a Puma 3 story

Flexible

Flexible

VARIOWEB (0-100% infinitely adj.)

100% axialrollers - Heavy soil conditions

Flexible

VARIOWEB (0-100% infinitely adj.)

0% axialrollers - Light soil conditions

VARIOWEB (0-100% infinitely adj.)

0% axialrollers - Light soil conditions

- 3 possibilities :
  - **VARIOWEB** = Combination pintlebelt – axialrollers
  - Pintlebelt – Crossrollers (see machine Vandenborne)
  - Pintlebelt

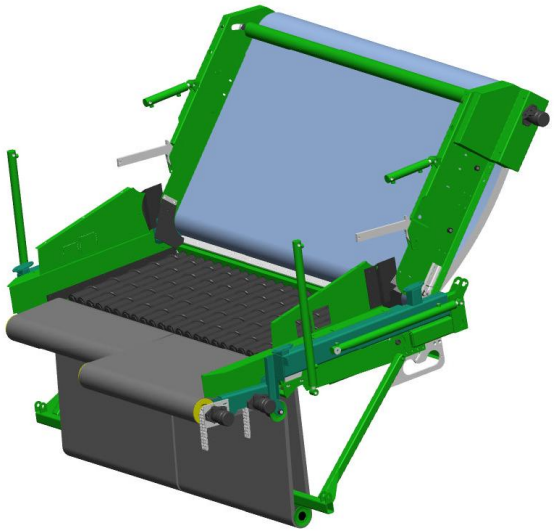

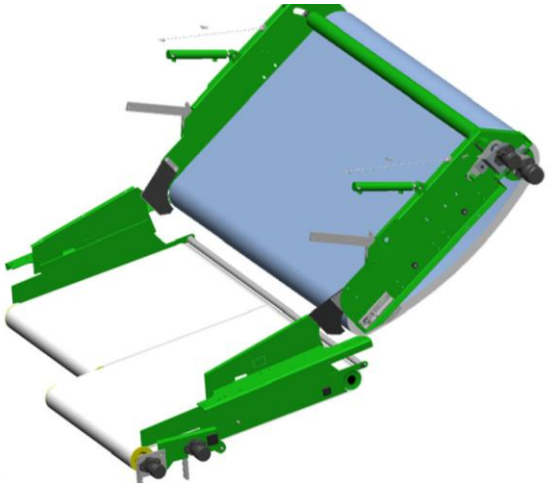

Cleaning in the back

- How did we even improve?
  - Pintlebelt **2550 mm** wide (+200 mm!)
  - U-profile fingers on pintlebelt
  - **Extra 'haulmfingers'** on pintlebelt
  - **28** axialrollers (length 825 mm) (dia 76 or 82)
  - Crossrollers : 1 segment wider

→ More cleaning surface

→ More efficiënt cleaning

Cleaning in the back

- How did we even improve?
  - Pintlebelt **2550 mm** wide (+200 mm!)
  - U-profile fingers
  - **Extra 'haulmfin**
  - **28** axialrollers (le)
  - Crossrollers : 1 se

KEEN & GREEN APPROVED!

→ **More cleaning surface**

→ **More efficiënt cleaning**

It’s a Puma 3 story

Soft skin

Ring elevator

- Width 1200 mm
- ‘Heavy duty’ sieving web ring with product-friendly fingers
- Capacity (over 140T/h)
- Boost pressure : when working pressure too high: short boost
- Against ‘stacks’ : automatic thighteners

Ring elevator

- Width 1200 mm
- ‘Heavy duty’ sieving web ring with product-friendly fingers
- Capacity (over 140T/h)
- Boost pressure : when working pressure too high: short boost
- Against ‘stacks’ : automatic thighteners

It’s a Puma 3 story

Grand

8 ton bunker

- Unloading on the go
- Bunkerfloor and elevator separately driven for optimal use !
- Extra sieving capacity
- **Improvements :** emptying of bunker doubles the speed of Puma+ , capacity control bunkerfloor

8 ton bunker

- Unloading on the go
- Bunkerfloor and elevator separately driven for optimal use !
- Extra sieving capac
- **Improvements :** er ples the speed of Puma+ , capacity c

KEEN & GREEN APPROVED!

To sum up

- Own weight of the machine = starts at 23.500 kg + IF tyres
  → avoid soil compaction !
- New haulm topper
- Cleaning capacity/concept:
  - Unique Varioweb system: stepless cleaning system, depending on conditions
  - Extra cleaning: longer diggerweb, more efficient vibrators, wider pintlebelt , wider axialrollertable
- New motor STAGE IV
  → less fuel consumption

To sum up

- New command – easy, intuitive
- Bigger tyres, more traction , IF tyres
  → harvesting in really harsh conditions
  → less soil pressure
- Bunker emptying while driving
  → saves time + more capacity
- Better quality, less work = more efficiency

Conclusion

- What do we want to achieve with the AVR Puma 3?
  - Ready for allmost all conditions
  - **Light**, manoeuvrable
  - Ease of use

  - **Reliability !**

Conclusion

We help our customers store a higher percentage (keen) of sellable crops with less input (green).

Live introduction to wider audience

Stay up-to-date !

Use **#Puma3** on social media

Q&A

Now, let's go experience the Puma 3 !

Demo address:
Reuselweg, near old toll office (E34)